ASSEMBLY INSTRUCTIONS

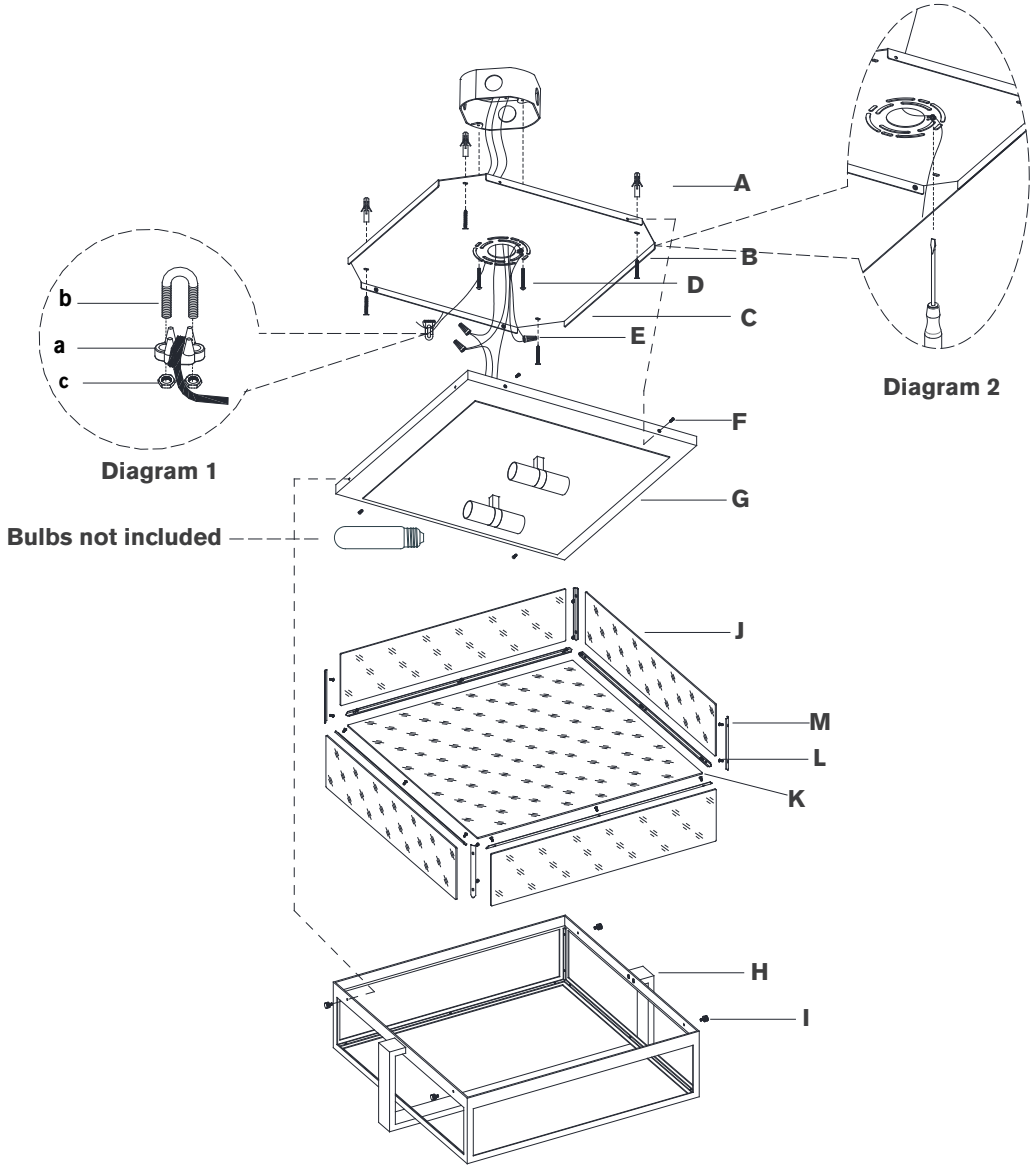

Halle 24" Flush Mount

Item # S 4197

NOTICE:

This light fixture should be installed in accordance with all applicable, local installation codes, and by a person familiar with the construction and operation of it, as well as the hazards involved. Inspect item and contents carefully. If any damage or defect is found, do not install. Retain all packaging material until installation is complete and approved.

TOOLS REQUIRED (NOT INCLUDED):

Phillips Screwdriver	Slotted Screwdriver	Drill
Hammer	Pencil	

1. Carefully remove all parts from the box. Place on a clean, soft surface.
2. Remove mounting plate **(B)** from fixture body **(G)** by removing side screws **(F)**.
3. Remove lantern **(I)** from fixture body **(G)** by removing side screws **(H)**.
4. Using mounting plate **(B)** as a guide, line up with the junction box and mark anchor positions.
5. Using a drill bit slightly smaller than the anchor, drill holes in the marked positions. Install anchors **(A)** into holes using hammer.
6. Install mounting plate **(B)** to junction box and secure with mounting screws **(D)**, then secure wood screws **(C)** to anchors **(A)**.
7. Run support through hole on back of mounting plate **(B)**. Wrap the support cable around the saddle **(a)**, and secure with u-bolt **(b)** and hex nuts **(c)**. (See diagram 1)
8. Wrap fixture ground wire (green) around the green grounding screw (see diagram 2). Tighten. Continue fixture ground wire and connect to supply ground wire (usually green or bare copper) using wire nut **(E)**.
   NOTE: It is imperative that the fixture is grounded.
9. Connect fixture neutral wire (white) to the supply neutral wire (usually white) using wire nut **(E)**.

ASSEMBLY INSTRUCTIONS

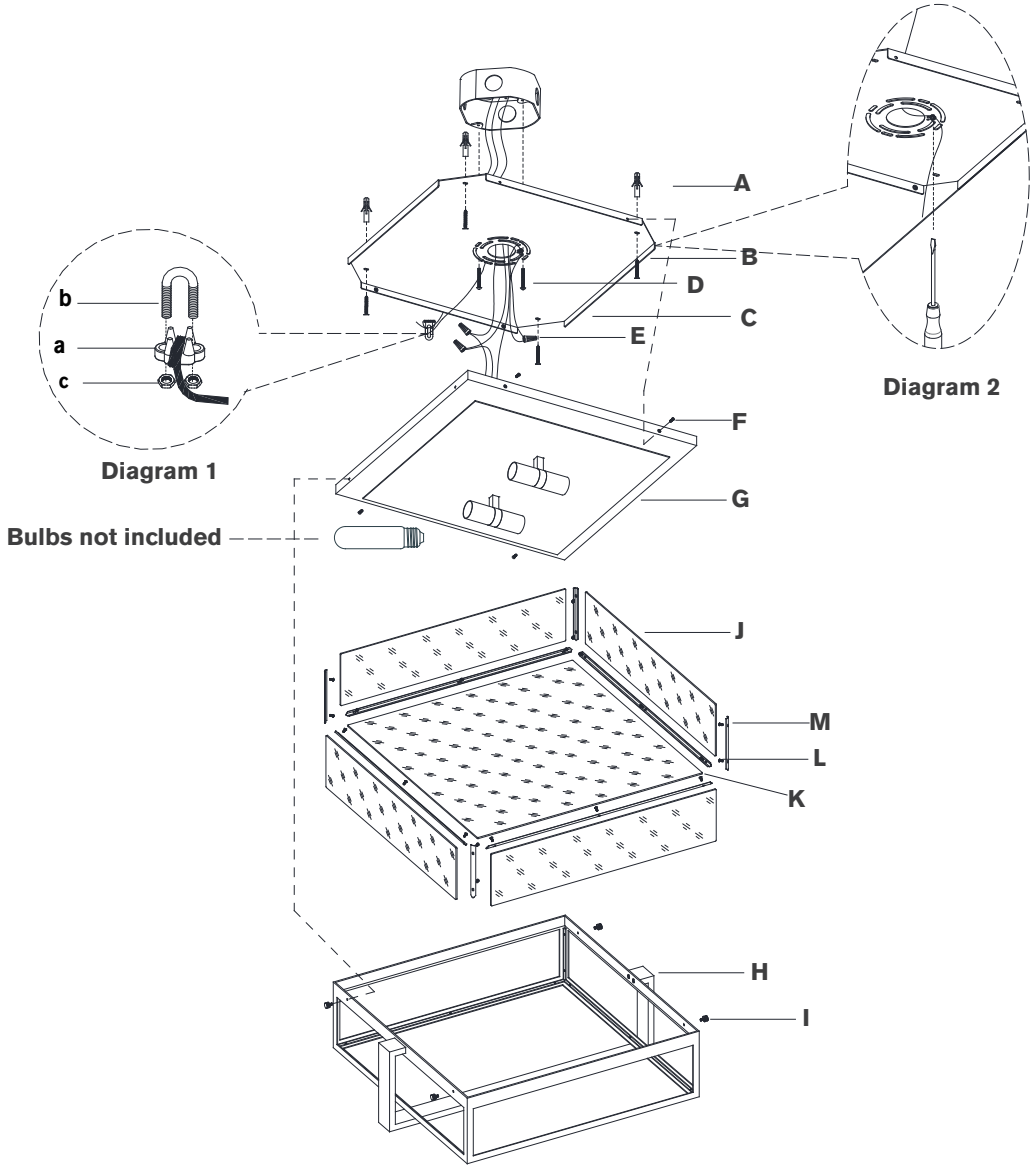

Halle 24" Flush Mount

Item # S 4197

NOTICE:

This light fixture should be installed in accordance with all applicable, local installation codes, and by a person familiar with the construction and operation of it, as well as the hazards involved. Inspect item and contents carefully. If any damage or defect is found, do not install. Retain all packaging material until installation is complete and approved.

10. Connect fixture hot wire (black) to the supply hot wire (usually black) using wire nut **(E)**.
    CAUTION: Do not reverse the hot and neutral connections.
11. Make sure all wire connections are tight, then carefully tuck into the junction box.
12. Install fixture body **(G)** to mounting plate **(B)** and secure with side screws **(F)**.
13. Remove metal tabs **(M)** from lantern **(I)** by unscrewing screws **(L)**, then install glass panels **(J) & (K)** to lantern **(I)** and secure with metal tabs **(M)** using screws **(L)**.
    NOTE: Do not over-tighten otherwise shade could become damaged.
14. Install light bulb into the socket.
15. Install lantern **(I)** to fixture body **(G)** and secure with side screws **(H)**.

Care Instructions: Clean only with a soft dry cloth or feather duster. Do not use abrasive or chemical agents.